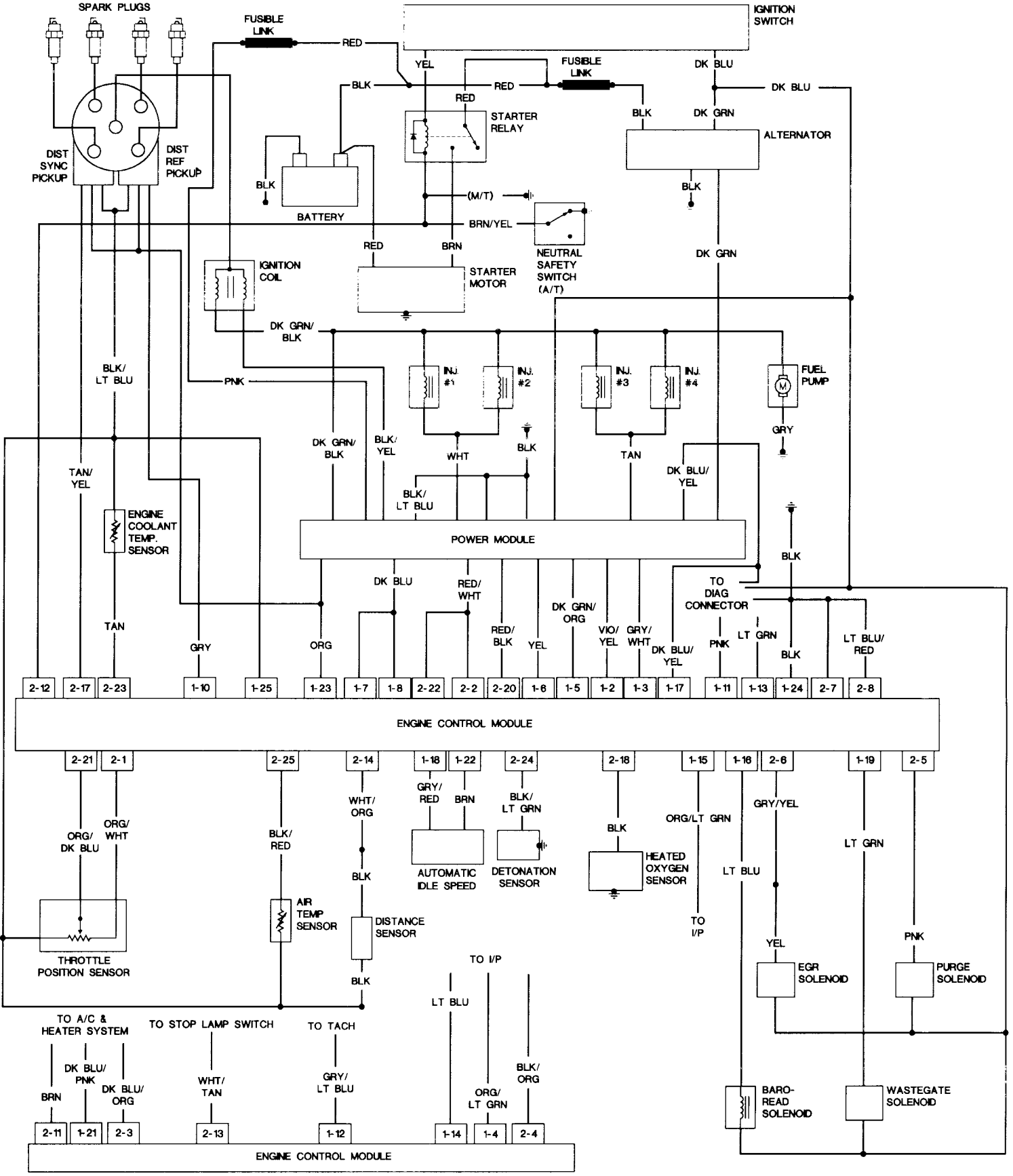
SPARK PLUGS
FUSIBLE LINK
RED
IGNITION SWITCH
YEL
FUSIBLE LINK
DK BLU
BLK
RED
DK BLU
RED
STARTER RELAY
BLK
DK GRN
ALTERNATOR
DIST SYNC PICKUP
DIST REF PICKUP
BLK
BATTERY
(M/T)
BLK
BRN/YEL
NEUTRAL SAFETY SWITCH (A/T)
RED
BRN
DK GRN
IGNITION COIL
STARTER MOTOR
DK GRN/ BLK
BLK/ LT BLU
PNK
INJ. #1
INJ. #2
INJ. #3
INJ. #4
FUEL PUMP
GRY
DK GRN/ BLK
BLK/ YEL
WHT
BLK
TAN
DK BLU/ YEL
TAN/ YEL
BLK/ LT BLU
ENGINE COOLANT TEMP. SENSOR
POWER MODULE
BLK
DK BLU
RED/ WHT
TO DIAG CONNECTOR
DK GRN/ ORG
TAN
GRY
ORG
RED/ BLK
YEL
VIO/ YEL
GRY/ WHT
DK BLU/ YEL
PNK
LT GRN
BLK
LT BLU/ RED
2-12
2-17
2-23
1-10
1-25
1-23
1-7
1-8
2-22
2-2
2-20
1-6
1-5
1-2
1-3
1-17
1-11
1-13
1-24
2-7
2-8
ENGINE CONTROL MODULE
2-21
2-1
2-25
2-14
1-18
1-22
2-24
2-18
1-15
1-16
2-6
1-19
2-5
ORG/ DK BLU
ORG/ WHT
BLK/ RED
WHT/ ORG
GRY/ RED
BRN
BLK/ LT GRN
BLK
ORG/LT GRN
GRY/YEL
LT GRN
LT BLU
BLK
AUTOMATIC IDLE SPEED
DETONATION SENSOR
HEATED OXYGEN SENSOR
THROTTLE POSITION SENSOR
AIR TEMP SENSOR
DISTANCE SENSOR
TO I/P
YEL
PNK
EGR SOLENOID
PURGE SOLENOID
BLK
TO I/P
LT BLU
TO A/C & HEATER SYSTEM
TO STOP LAMP SWITCH
TO TACH
DK BLU/ PNK
BRN
DK BLU/ ORG
WHT/ TAN
GRY/ LT BLU
ORG/ LT GRN
BLK/ ORG
BARO-READ SOLENOID
WASTEGATE SOLENOID
2-11
1-21
2-3
2-13
1-12
1-14
1-4
2-4
ENGINE CONTROL MODULE